Flexible Ambient 1x4 | Recessed

BalancedCare™

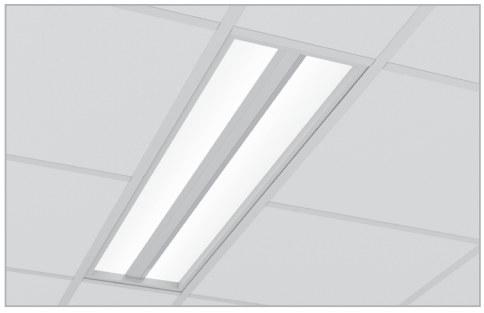

SECTION VIEW

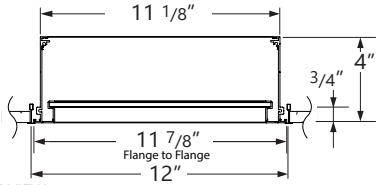

SIDE VIEW

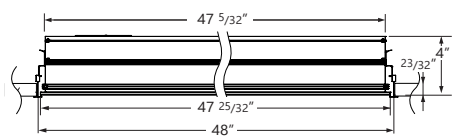

Project _____

Type _____

Notes _____

- Recessed ambient provides soft, even illumination
- Available in general diffuse and wide distributions
- Modular optical chamber with room-side access
- Low profile design, housing only 4" deep
- Controls and sensor ready
- Other sizes available: 1x1, 2x2 and 2x4

*See performance chart on page 7.

BeSealed CONSTRUCTION · BeWell CONTROLS · BeWell TECHNOLOGIES · BeWell OPTICS · bios ILLUMINATED · c UL us Listed · CCEA APPROVED · Axitune Tunable White · PoE · NSF · IP64 · Control Sensors · IC cULus Listed Type I.C. · LED BOARD & DRIVER 5 YEAR LUMINAIRE WARRANTY

*Patent pending

Ordering Guide

BCFA		14											
PRODUCT ID		**SIZE**		**NOMINAL LUMENS (ambient section)**		**CRI**		**COLOR TEMP. (choose one)**				**DISTRIBUTION**	
BCFA	Flexible Ambient Recessed	**14**	1'X4'	**2300**	2300 lm - Minimum	**80**	80 CRI	**30**	3000 K	**TW2750**	2700-5000 K - Tunable White	**GD**	general diffuse
				4300	4300 lm - Maximum	**90**	90 CRI*	**35**	3500 K			**WD**	wide
								40	4000 K				
								B30	3000 K - Bios*				
								B35	3500 K - Bios*				
								B40	4000 K - Bios*				
				Outputs between listed min and max are available. Consult factory for outputs outside of the listed range. Consult factory for max output with BIOS.		* Not available with BIOS		Consult Axitune technical sheet for more information on color technology. *Consult BIOS guide for more information on BIOS technology. Only available with 80 CRI.					

CENTER OPTICS - CO (see page 2 for code)		**FINISH**		**VOLTAGE**		**DRIVER**		**CIRCUITS**	
CO(#)!!	center optics (See page 2 for available options and ordering code. Paste the code string in parentheses. EX.: CO(SO[200]).)	**AMW**	antimicrobial white*	**120**	120 V	**DP**	dimming (0-10V) 1%	**1**	1 circuit
		W	white	**277**	277 V	**LT(#)**	Lutron*	**2**	2 circuits
		C	custom**	**347**	347 V	**BI**	bi-level dimming	**+E(#)**	emergency section *
BL	Blank (non-illuminated center strip)**			**UNV**	universal	**O(#)**	other**	**+GTD(#)**	generator transfer device*
				DC	low voltage*	**DPB(#)**	dimming (0-10V) 1% with Bios*		
						TW(#)	tunable white drivers*		
						POE(#)	POE drivers*		
!! Refer to page 2 for specific ordering code choices and examples. ** BL - IP64 rated. Other center options are not IP64 rated.		* Standard finish **Consult factory for NSF.		* Only available with POE drivers.		* See page 4 to specify system ** Please consult factory; see page 4		* Specify quantity	

LV CONTROLLER (OPT.)		**MOUNTING**		**BATTERY (OPT.)**		**OTHER (OPT.)**	
LVC1	low voltage controller (Mode 1)	**TB9**	t-bar 9/16"	**B(#)**	battery pack	**F**	fuse *
LVC2	low voltage controller (Mode 2)	**TB15**	t-bar 15/16"				
LVCD3	low voltage controller (Mode 3 step dim)	**TG9**	tegular 9/16"				
LVCD4	low voltage controller (Mode 3 smooth dim)	**TG15**	tegular 15/16"				
LVCD5	low voltage controller (Mode 4 step dim)	**DF**	drywall flange				
LVCD6	low voltage controller (Mode 4 smooth dim)						
Not available with 347V Please consult factory For compatibility with control devices, such as pillow speaker handset. See wiring diagrams on page 6-7.				Not available with 347V Please consult factory		*Requires 120V or 277V	

Accessories ordered separately. See Accessories ordering guide. CLICK!

Optical chamber available to order separately. See page 3. CLICK!

© 2020 BalancedCare™ by Axis Lighting Inc.

1.800.263.2947 | 514.948.6272

BalancedCare™ by axis
balancedcare.axislighting.com

Center Optics Ordering Guide (transfer ordering code to page 1-CO column)

SHIELDING & NOM. LUMENS/FT - DIRECT				
SO[lumen]	spotless lens	**200** **300** **400**	200 lm/ft 300 lm/ft 400 lm/ft	**SO lens option only**
MLWB[lumen]	micro louver wide- black*	**200**	200 lm/ft	**micro louver option only**
MLNB[lumen]	micro louver narrow - black*	**300**	300 lm/ft	
MLWG[lumen]	micro louver wide - grey*	**450**	450 lm/ft	
MLNG[lumen]	micro louver narrow - grey*	**600**	600 lm/ft	

* Micro louver recommended at outputs over 500 lm/ft.
Please consult factory for more information.

EX.: CO (SO[300]) to be placed in CO column

SO or MICRO LOUVER OPTIONS

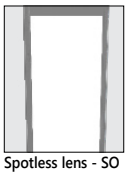
Spotless lens - SO

Black narrow micro louver shown - 60°, flush.

Grey narrow micro louver shown - 60°, flush.

Black wide micro louver shown - 70°, regressed.

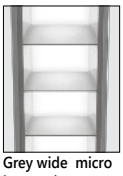
Grey wide micro louver shown - 70°, regressed.

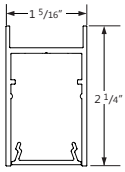

Spotless Lens - SO

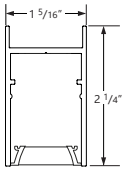

Micro Louver- Wide

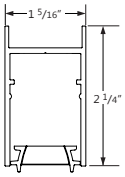

Micro Louver- Narrow

MIKROLITE - MKL[#, Beam Angles, Cell Finish]					
MIKROLITE MODULE QTY		**BEAM ANGLE**		**CELL FINISH**	
MKL[#]	MikroLite module	**MKL35** **MKL20**	**35 deg** **20 deg**	**GR** **BLK**	gray black
1 module contains 4 MikroLites; Module length is 4". Minimum distance from edge 2". 500 lm/module					

EX.: CO (MKL [2, MKL35, GR]) to be placed in CO column

CENTER OPTICS WITH MIKROLITE 1.0

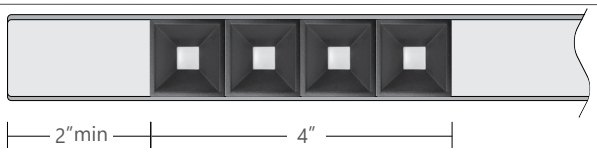

1 module contains 4 Mikrolites

ACCENT - AC[#, Beam, Finish]					
ACCENT QUANTITY		**BEAM**		**ACCENT FINISH**	
AC[#]	accent quantity	**AC20** **AC35**	20 deg 35 deg	**AP** **W** **BLK**	aluminum paint white black
Only available in 500 lumens, 3000 K, 80 CRI with 0-10V dimming (1%). Minimum spacing between Accents is 4". Accent provided only on blank section by default (min length 2').					

EX.: CO (AC[2, AC20, AP]) to be placed in CO column

ACCENT OPTIONS

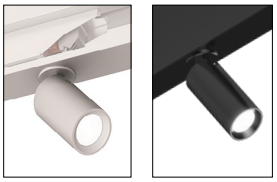
Accent on segment shown

CENTER OPTICS WITH ACCENT SECTION VIEW

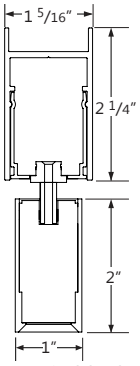

Accent in blank

© 2020 BalancedCare™ by Axis Lighting Inc.

1.800.263.2947 | 514.948.6272

BalancedCare™ by axis

balancedcare.axislighting.com

Modular optical chamber is available as optional shelf stock for easy maintenance change-out; ordered separately.

Optical Chamber Ordering Guide

BCFA		OC14													
PRODUCT ID		**SIZE**		**NOMINAL LUMENS**		**CRI**		**COLOR TEMP. (choose one)**						**DISTRIBUTION**	
BCFA	Flexible Ambient Recessed	**OC14**	1'X4' optical chamber	**2300**	2300 lm - Minimum	**80**	80 CRI	**30**	3000 K	**TW2750**	2700-5000 K - Tunable White			**GD**	general diffuse
				4300	4300 lm - Maximum	**90**	90 CRI*	**35**	3500 K					**WD**	wide
								40	4000 K						
								B30	3000 K - Bios*						
								B35	3500 K - Bios*						
								B40	4000 K - Bios*						
				Outputs between listed min and max are available. Consult factory for outputs outside of the listed range. Consult factory for max output with BIOS.		* Not available with BIOS		Consult Axitune technical sheet for more information on color technology. *Consult BIOS guide for more information on BIOS technology. Only available with 80 CRI.							

				NA		NA		NA		NA	
CENTER OPTICS - CO (see page 2 for code)		**FINISH**		**VOLTAGE**		**DRIVER**		**CIRCUITS**		**LV CONTROLLER (OPT.)**	
CO(#)!!	center optics (See page 2 for available options and ordering code. Paste the code string in parentheses. **EX.: CO(SO[200])**.)	**AMW**	antimicrobial white*	**NA**	not applicable	**NA**	not applicable	**NA**	not applicable	**NA**	not applicable
BL	Blank (non-illuminated center strip)**	**W**	white								
		C	custom**								
* BL - IP64 rated. Other center options are not IP64 rated.		* Standard finish **Consult factory for NSF.									

NA		NA		NA	
MOUNTING		**BATTERY (OPT.)**		**OTHER (OPT.)**	
NA	not applicable	**NA**	not applicable	**NA**	not applicable

Optical Chamber Replacement

1

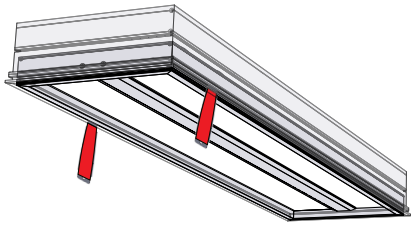

PRY WITH PROVIDED LENS TOOL FOUR CORNERS

LEVIER AVEC OUTILE FOURNIS AUX QUATRE COINS

2 REPLACE OPTICAL CHAMBER
REMPLACER LA CHAMBRE OPTIQUE

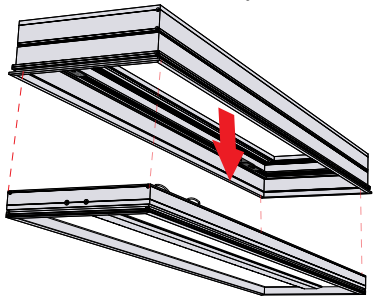

DISCONNECT WIRES FROM DRIVER
DÉBRANCHEZ LES FILS DU PILOTE

Use part # BCLTL to order lens tool as an accessory. See Accessories ordering guide. CLICK!

© 2020 BalancedCare™ by Axis Lighting Inc.

1.800.263.2947 | 514.948.6272

BalancedCare™ by axis

balancedcare.axislighting.com

SPECIFICATIONS

Housing	Extruded aluminum (0.065" nominal)
Central Housing	Extruded aluminum (0.065" nominal)
Center Lens	Spotless PMMA lens (optional)
Side Lens	4mm PMMA light guides
Reflectors	Specular aluminum
Drywall Flange Kit	Extruded aluminum (0.060" nominal)

ELECTRICAL

Lutron driver*	**LDE1** - Hi-lume 1% EcoSystem with Soft-on, Fade-to-Black **LTEA** - Hi-lume 1% 2-wire (120V forward phase only) *Consult factory
Other drivers**	**DALI** - Digital Addressable Lighting Interface **DMX** - Digital Multiplex **LV** - line voltage - Advance Mark 10 **Xitanium SR** - For wireless sensor
BIOS DPB drivers*	**STC** - BIOS control 0-10V with static spectrum and BIOS SkyBlue enabled from 100% to 1%. **DYN**- BIOS control 0-10V with dynamic spectrum and BIOS SkyBlue® with Bio-Dimming™ enabled 100% to 50%, light output dimming from 49% to 1%.
Tunable White TW drivers*	**DALIDT6** - DALI Type 6 (Two DALI Addresses) **DALIDT8** - DALI Type 8 (One DALI Address) **LTTW** - Lutron T-Series Tunable White
Power over Ethernet POE drivers* UL2108 certified for integral or remote driver	MOLEX IGOR **O** - Other (Consult factory)
Emergency	Integral emergency battery pack or emergency circuit optional.
Input Voltage	120V, 277V, 347V, UNV, DC.
Flex Whip	Shipped in a separate box for contractors to install

***Choose driver from available options.**

Incorporating these components may have limitations or affect the length of the luminaire. Please contact factory for more details.

FINISH

Highly reflective, matte powder coat white paint for high efficiency. Matte texture to diffuse glare and lamp image on the surface within the optical chamber exterior. Custom finishes are also available.

LED SYSTEM

CRI	Minimum 80 or 90 color rendering index options.
CRI BIOS	Minimum 80 color rendering index with R9>75 for all CCTs.
CCT Single Color	Choice of 3000K, 3500K and 4000K color temperature with a great color consistency (within 3–step MacAdam ellipse). Both within fixture and fixture to fixture.
CCT BIOS	BIOS Static (STC) Choice of 3000K, 3500K and 4000K. BIOS SkyBlue® Dynamic (DYN) Choice of 3000K, 3500K, and 4000K with Bio-Dimming™ Consult BIOS guide for more information on BIOS technology.
CCT Axitune Systems	Consult Axitune technical sheet for more information on color technology.
LED life	Minimum 50,000h with 85% of lumen maintenance in 25°C ambient temperature, in compliance with IES LM-80 testing measurements.
Thermal Management	Aluminum housing acting as the heat sink to maximize life.
Environment	For all line voltage drivers, dry and damp rated for ambient operating temperature of -20° to +40° C (-4° to +104°F) For POE driver option, dry and damp rated for ambient operating temperature of 0° to +40°C (+32° to +104°F) Consult factory for temperature outside this range.

© 2020 BalancedCare™ by Axis Lighting Inc.

1.800.263.2947 | 514.948.6272

BalancedCare™ by axis
balancedcare.axislighting.com

CEILING SYSTEM

T-BAR STYLE MOUNTING

(TB9)

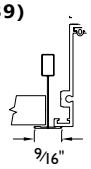

9/16" T-BAR

(TB15)

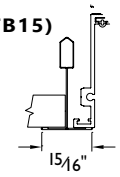

15/16" T-BAR

(TG9)

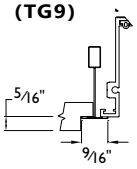

9/16" TEGULAR

(TG15)

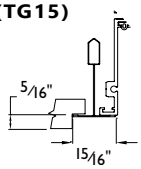

15/16" TEGULAR

DRYWALL WITH FLANGE KIT (DF)

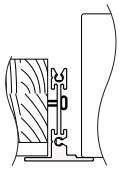

WITH WOOD FRAME

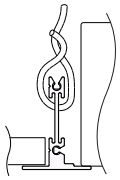

WITHOUT WOOD FRAME

DRYWALL MOUNTING KIT

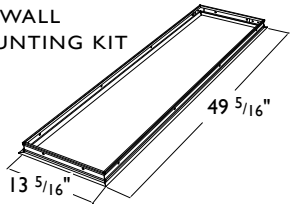

FIXTURE DIMENSIONS
47 13/16"x11 13/16"

CUT HOLE DIMENSIONS
48 9/16"/ 12 9/16"

Installation sheets for all mounting options are available at: www.balancedcare.axislighting.com

APPROVALS

With product features that promote cleanability and durability, BalancedCare™ meets functional and application-specific industry listings such as UL, Ingress Protection (IP) and National Sanitation Foundation (NSF) standards.

WEIGHT

Standard	26 lbs / 11.8 kg
Drywall with Kit	28 lbs / 12.7 kg

WARRANTY

BalancedCare™ by Axis Lighting will warrant defective LEDs, boards, and drivers for 5 years from date of purchase. Warranty is valid if luminaire is installed and used according to specifications. If defective, BalancedCare™ will send replacement boards or drivers at no cost along with detailed replacement instructions and instructions on how to return defective components to BalancedCare™.

STANDARD AND END MOUNT POWER FEED

Knockouts for BX cable connection are provided.

(BX CABLE BY OTHER)

TOP VIEW

© 2020 BalancedCare™ by Axis Lighting Inc.

1.800.263.2947 | 514.948.6272

BalancedCare™ by axis
balancedcare.axislighting.com

● LOW VOLTAGE CONTROLLERS - CONFIGURATIONS

		MODE #1 (DEFAULT)	MODE #2	MODE #3		MODE #4	
		Ambient Light and Center Light Independent (ON/OFF)	Ambient Light and Center Light Sequential	Ambient Light Dimming, Center Light Independent (ON/OFF)		Ambient Light and Center Light Dimming	
				Step Dimming (one direction)	Smooth Dimming (two direction)	Step Dimming (one direction)	Smooth Dimming (two direction)
Toggling Switch 1 (Pillow Speakers, wall switch) affects Ambient as follows:	**First Toggle**	Ambient ON	Ambient ON, Center OFF	Ambient ON, Full brightness	"First toggle: Ambient ON, dim level set to Approx. 100% brightness Subsequent sustained presses: smooth dimming* Second toggle: Ambient OFF"	Ambient ON, Full brightness dimming	"First toggle: Ambient ON, dim level set to Approx. 100% brightness Subsequent sustained presses: smooth dimming* Second toggle: Ambient OFF"
	Second Toggle	Ambient OFF	Ambient OFF, Center ON	Ambient ON, Approx. 60% (4 VDC) brightens		Ambient ON, Approx. 60% (4 VDC) brightens	
	Third Toggle	-	Ambient ON, Center ON	Ambient ON, Approx. 30% (1.37 VDC) brightens		Ambient ON, Approx. 30% (1.37 VDC) brightens	
	Fourth Toggle	-	Ambient OFF, Center OFF	Ambient ON, Approx. 10% (0.8 VDC) brightens		Ambient ON, Approx. 10% (0.8 VDC) brightness	
	Fifth Toggle	-	-			Ambient OFF	
Toggling Switch 2 (Pillow Speakers, wall switch) affects Center as follows:	**First Toggle**	Center ON	-	Center ON	Center ON	Center ON, Full brightness	"First toggle: Center ON, dim level set to Approx. 100% brightness Subsequent sustained presses: smooth dimming* Second toggle: Center OFF"
	Second Toggle	Center OFF	-	Center OFF	Center OFF	Center ON, Approx. 60% (4 VDC) brightness	
	Third Toggle	-	-			Center ON, Approx. 30% (1.37 VDC) brightens	
	Fourth Toggle	-	-			Center ON, Approx. 10% (0.8 VDC) brightens	
	Fifth Toggle	-	-			Center OFF	

© 2020 BalancedCare™ by Axis Lighting Inc.

1.800.263.2947 | 514.948.6272

BalancedCare™ by axis
balancedcare.axislighting.com

LOW VOLTAGE CONTROLLERS WIRING DIAGRAMS

WIRING DIAGRAM 1

AMBIENT AND CENTER INDEPENDENT ON/OFF (NO DIMMING)

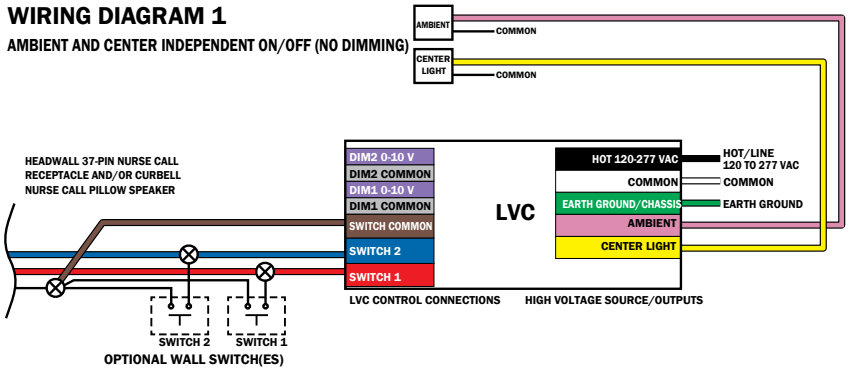

1. LVC Mode 1 - Ambient Light and Center Light, Independent ON/OFF,no dimming (DEFAULT mode)

WIRING DIAGRAM 2

AMBIENT AND CENTER SEQUENTIAL

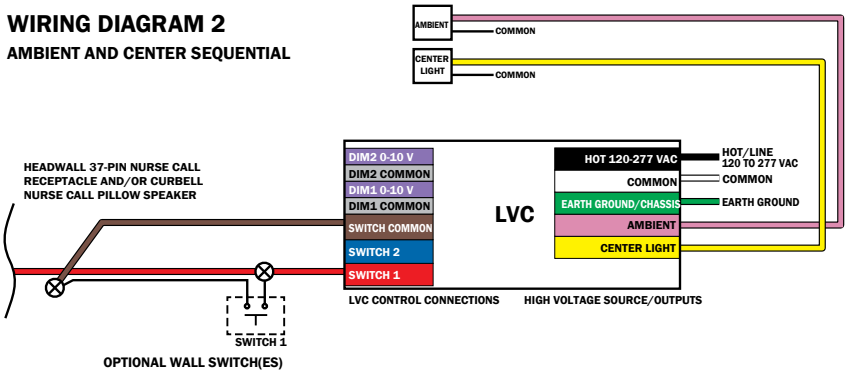

2. LVC Mode 2 - Ambient Light and Center Light, Sequential ON/OFF, no dimming

WIRING DIAGRAM 3

AMBIENT INDEPENDENT (WITH DIMMING)
CENTER INDEPENDENT ON/OFF (NO DIMMING)

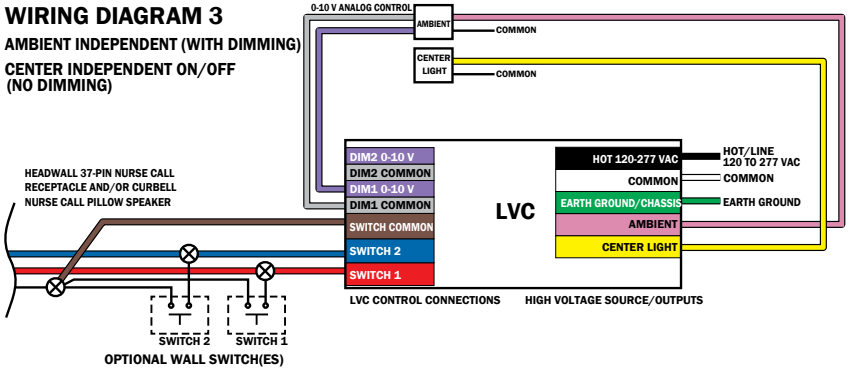

3. LVCD Mode 3 - Step dimming (Ambient dimming, Center ON/OFF)
4. LVCD Mode 3 - Smooth dimming (Ambient dimming, Center ON/OFF)

WIRING DIAGRAM 4

AMBIENT AND CENTER INDEPENDENT (WITH DIMMING)

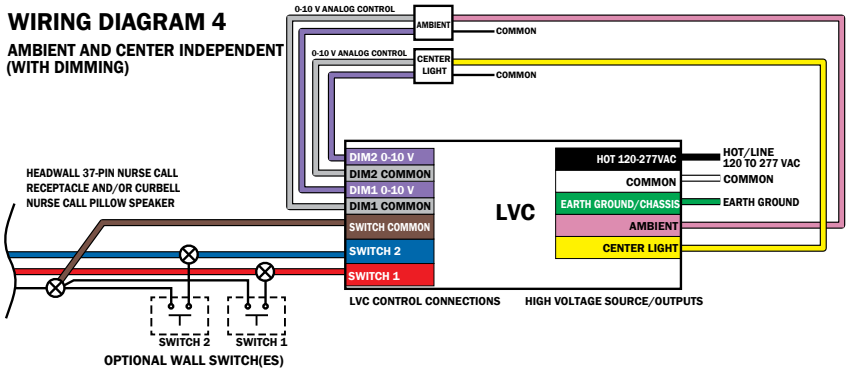

5. LVCD Mode 4 - Step dimming (Ambient and Center dimming)
6. LVCD Mode 4 - Smooth dimming(Ambient and Center dimming)

© 2020 BalancedCare™ by Axis Lighting Inc.

1.800.263.2947 | 514.948.6272

BalancedCare™ by axis
balancedcare.axislighting.com

PERFORMANCE AT 3500K

DISTRIBUTION	LUMEN OUTPUT	INPUT WATTS*	EFFICACY	Estd. L85 LED Life (hrs.)
GENERAL DISTRIBUTION	4300 lm	46.7 W	92 lm/W	50000, min
WIDE	4300 lm	50.5 W	85 lm/W	50000, min

Please consult factory for custom lumen output and wattage.

● *PHOTOMETRIC DATA*

PHOTOMETRIC CURVE

General distribution

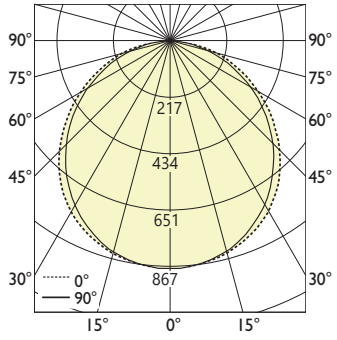

Luminaire Lumens: 2300 lm
Input Watts: 25 W
Efficacy: 92 lm/W
IES FILE: BCFA-14-2300-GD-80-35-W-120-D.ies

TESTED ACCORDING TO IES LM-79-2008

CANDELA DISTRIBUTION

	Horizontal Angles				
Vertical Angle	**0**	**22.5**	**45**	**67.5**	**90**
0	865	865	865	865	865
5	864	862	861	859	859
15	835	830	825	823	823
25	774	765	760	759	760
35	681	670	664	664	666
45	560	548	541	540	542
55	423	410	402	399	401
65	282	269	261	257	257
75	147	138	131	124	123
85	39	34	35	37	38
90	1	1	2	2	2

ZONAL LUMENS

	Lumens
Zone	
0	
0-10	82
10-20	233
20-30	351
30-40	417
40-50	419
50-60	361
60-70	260
70-80	139
80-90	38
90	

LUMINANCE DATA (cd/m²)

	Horizontal Angles		
Vertical Angle	**0**	**45**	**90**
45	2377	2294	2299
55	2213	2101	2096
65	1998	1853	1826
75	1700	1519	1423
85	1334	1191	1323

PHOTOMETRIC CURVE

General distribution

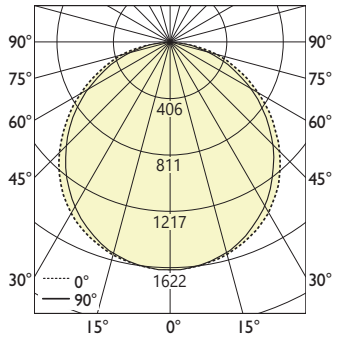

Luminaire Lumens: 4300 lm
Input Watts: 46.7 W
Efficacy: 92 lm/W
IES FILE: BCFA-14-4300-GD-80-35-W-120-D.ies

TESTED ACCORDING TO IES LM-79-2008

CANDELA DISTRIBUTION

	Horizontal Angles				
Vertical Angle	**0**	**22.5**	**45**	**67.5**	**90**
0	1618	1618	1618	1618	1618
5	1616	1613	1609	1606	1606
15	1561	1551	1543	1539	1538
25	1447	1431	1422	1420	1421
35	1273	1253	1242	1242	1245
45	1048	1024	1011	1009	1013
55	791	766	751	747	749
65	526	503	488	481	481
75	274	258	245	233	230
85	72	63	65	70	72
90	3	3	3	3	3

ZONAL LUMENS

	Lumens
Zone	
0	
0-10	153
10-20	436
20-30	656
30-40	779
40-50	783
50-60	675
60-70	487
70-80	260
80-90	71
90	

LUMINANCE DATA (cd/m²)

	Horizontal Angles		
Vertical Angle	**0**	**45**	**90**
45	4444	4290	4298
55	4138	3928	3919
65	3737	3465	3415
75	3180	2840	2661
85	2494	2228	2475

All IES files are available for download at: www.balancedcare.axislighting.com

© 2020 BalancedCare™ by Axis Lighting Inc.

1.800.263.2947 | 514.948.6272

BalancedCare™ by axis
balancedcare.axislighting.com

PHOTOMETRIC DATA

PHOTOMETRIC CURVE

Wide distribution

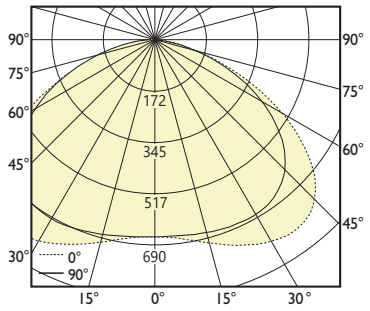

Luminaire Lumens: 2300 lm
Input Watts: 27 W
Efficacy: 85 lm/W
IES FILE: BCFA-14-2300-80-35-WD-W-120-D.ies
TESTED ACCORDING TO IES LM-79-2008

CANDELA DISTRIBUTION

	Horizontal Angles				
Vertical Angle	**0**	**22.5**	**45**	**67.5**	**90**
0	569	569	569	569	569
5	570	571	572	573	573
15	578	581	591	601	606
25	587	595	619	644	654
35	583	596	633	671	689
45	543	558	598	641	664
55	446	456	486	520	541
65	301	304	319	334	345
75	150	150	153	152	153
85	34	35	38	42	45
90	1	2	3	4	4

ZONAL LUMENS

	Lumens
Zone	
0	
0-10	55
10-20	168
20-30	287
30-40	395
40-50	458
50-60	430
60-70	311
70-80	157
80-90	40
90	

LUMINANCE DATA (cd/m²)

	Horizontal Angles		
Vertical Angle	**0**	**45**	**90**
45	2303	2538	2817
55	2332	2543	2829
65	2139	2262	2447
75	1743	1776	1771
85	1162	1301	1541

PHOTOMETRIC CURVE

Wide distribution

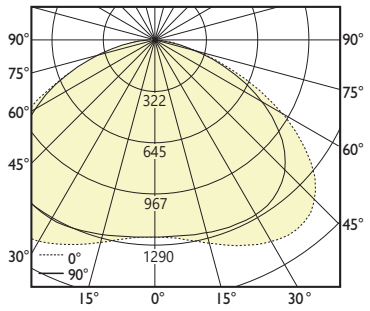

Luminaire Lumens: 4300 lm
Input Watts: 50.5 W
Efficacy: 85 lm/W
IES FILE: BCFA-14-4300-80-35-WD-W-120-D.ies
TESTED ACCORDING TO IES LM-79-2008

CANDELA DISTRIBUTION

	Horizontal Angles				
Vertical Angle	**0**	**22.5**	**45**	**67.5**	**90**
0	1064	1064	1064	1064	1064
5	1066	1067	1069	1071	1071
15	1080	1087	1105	1124	1132
25	1097	1113	1157	1204	1223
35	1089	1115	1183	1254	1287
45	1015	1043	1118	1199	1242
55	833	852	909	973	1011
65	563	568	596	624	645
75	281	281	286	284	286
85	63	65	71	78	84
90	3	4	6	7	8

ZONAL LUMENS

	Lumens
Zone	
0	
0-10	102
10-20	315
20-30	536
30-40	739
40-50	855
50-60	803
60-70	581
70-80	293
80-90	75
90	

LUMINANCE DATA (cd/m²)

	Horizontal Angles		
Vertical Angle	**0**	**45**	**90**
45	4306	4745	5267
55	4359	4754	5288
65	3999	4229	4576
75	3259	3320	3312
85	2173	2433	2881

All IES files are available for download at: www.balancedcare.axislighting.com

© 2020 BalancedCare™ by Axis Lighting Inc.

1.800.263.2947 | 514.948.6272

BalancedCare™ by axis
balancedcare.axislighting.com